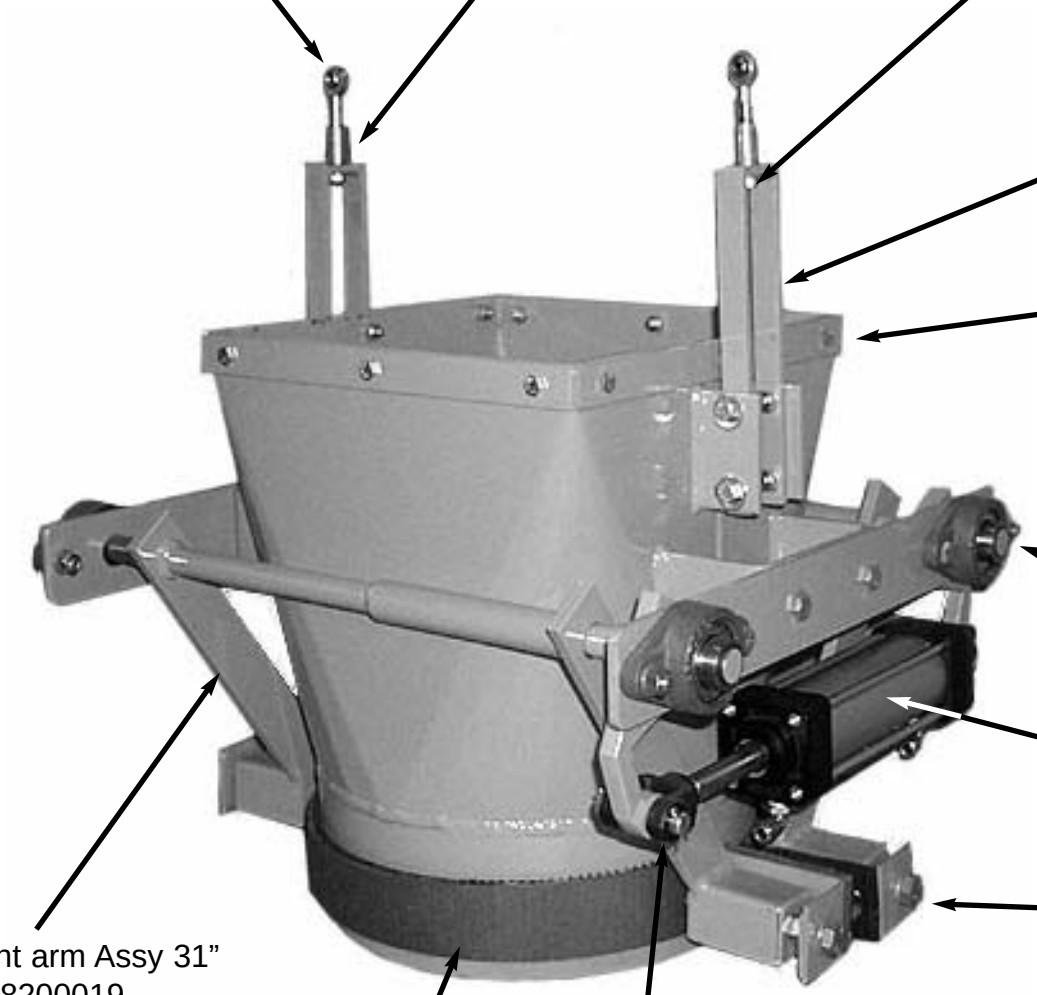AO by Circumference
DUST TIGHT SPOUT